Idea 3 –

Allows you to individually seal fruit and veg and access them easilly with an organized shelf system

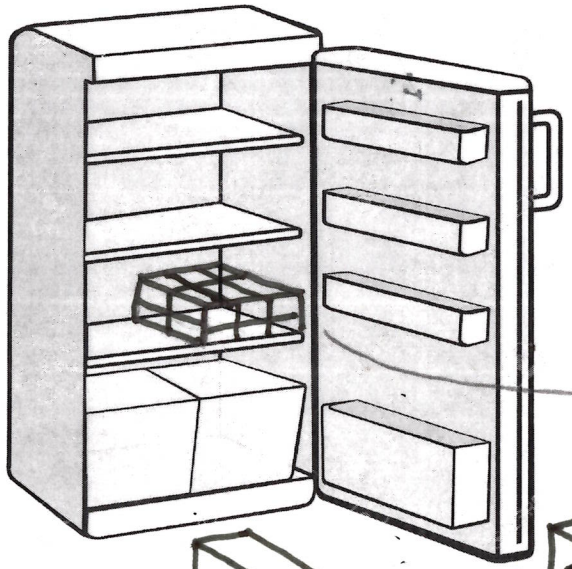

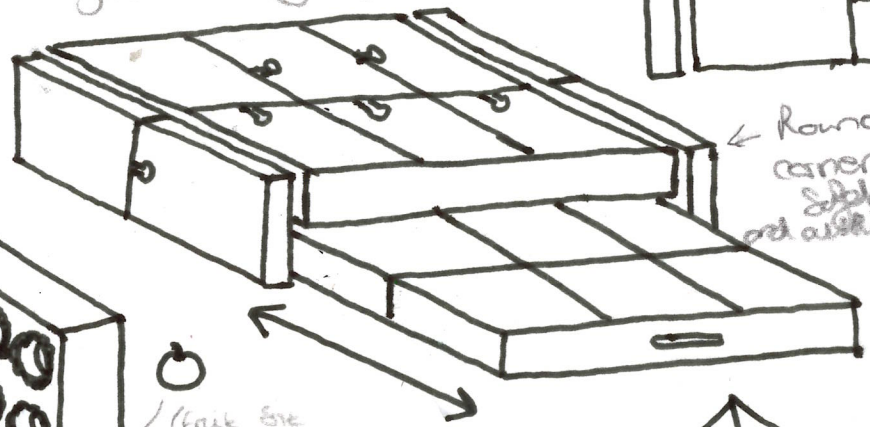

Rounded corners add safety and aesthetic

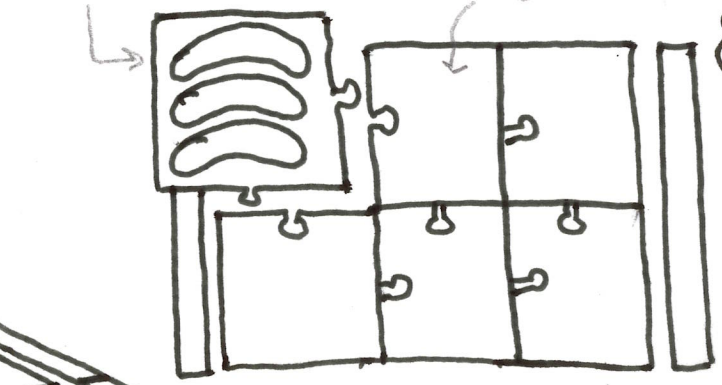

Very space inefficient?

3D printed meaning it's made from PLA which is food safe and biodegradable

Modular 'jigsaw' style so you can add/remove depending on what your storing and your fridge dimensions.

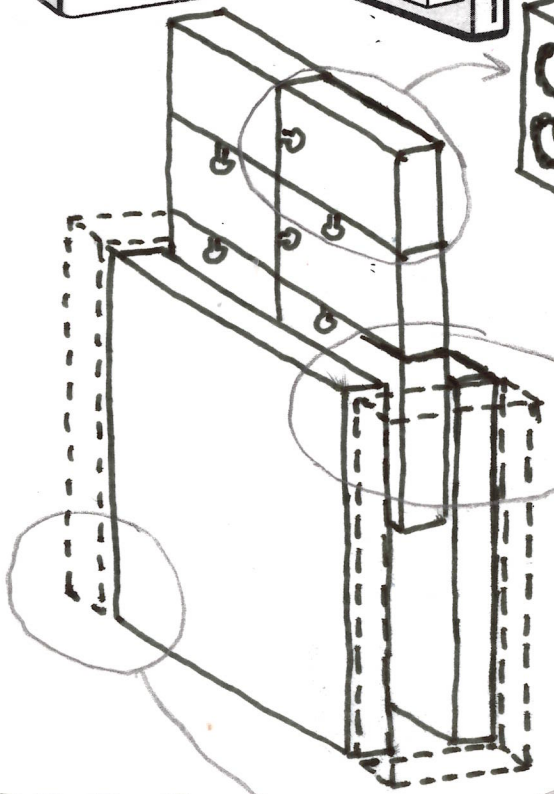

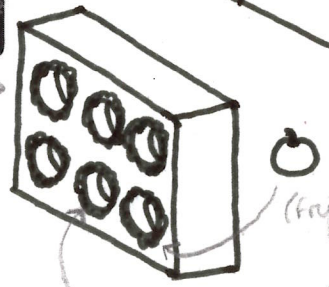

Silicon gaskets/seals

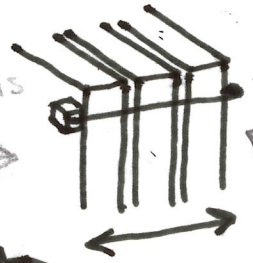

Expensive?

Some idea, just rotated

However, all seals have to be broken for you to take an item out, A better idea might be on a system so you only have to open the seal of what you take

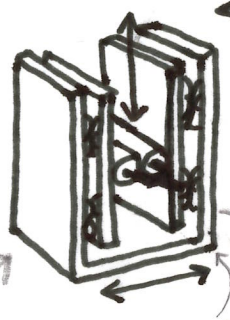

Shelf connection

Small, powerful servo motor pulls shelves onto contactor on all 4 sides to create seal

This creates an individual seal for each piece of fruit or veg and reduces chance of accelerated ripening and spoilage by other fruit

Maybe a screw or flap system for each food item?

Springs allow movement of shelves forward and back for the sealing mechanism

Bearings allow shelf to slide up for access

Some people don't even put fruit in the fridge?